Variant	Finition / Finishes
00	ZnFL Zn-Al 6µ min Deltaprotekt 2.0 Grey BS RR:480H
01	ZnNi(12-15%[Ni])8µ min + Cr3 gris/grey + FOM ProtedurNi75+ Ecotri Gris/grey +Corrosil501 BS RR:720H
02	BRUT DE TREMPE
06	ZnFL Zn-Al 8µ min Magni 3.0 gris/grey BS RR:720H

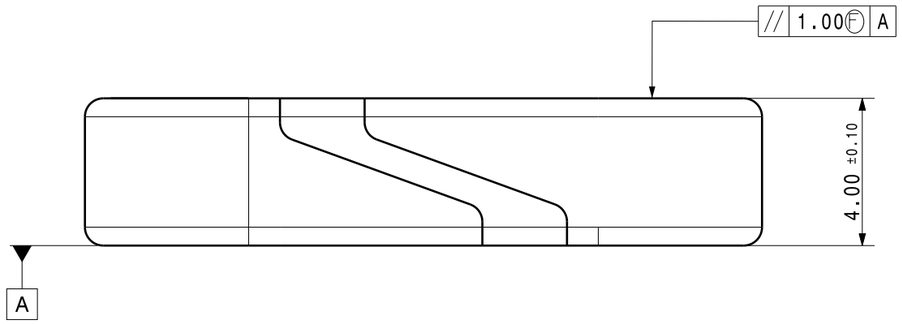

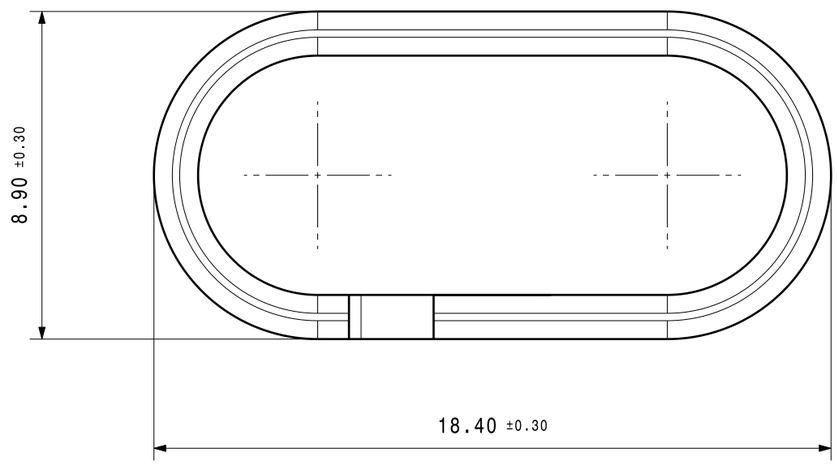

- Logement intérieur bague POUR INFORMATION : 6,50mm +0/-0,30 x 15,50mm +0/-0,30
- Couple de serrage admissible C1 et tenue sur support F1 : à valider pour chaque nouvelle application
- Chanfrein d'entrée obligatoire
- Dans le cas d'une distribution automatique et/ou du surmoulage, le process doit être validé par ARaymond

- Ring inner room FOR INFORMATION : 6,50mm +0/-0,30 x 15,50mm +0/-0,30
- Admissible tightening torque C1 and pull out force F1 : to be validated for each application
- Introduction chamfer required
- If automatic distribution and/or overmoulding, ARaymond must validate the process

VUE ISOMETRIQUE / *ISOMETRIC VIEW*
ECHELLE / *SCALE*: 3:1

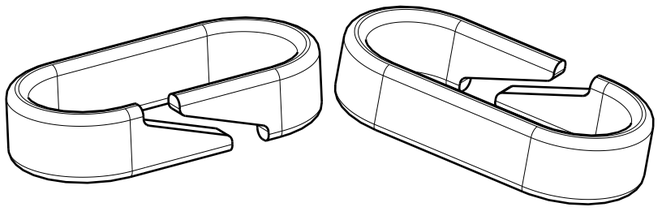

VERIFIER L ECHELLE APRES PHOTOCOPIE / BEWARE SCALE AFTER COPY

http://www.cergy-vis.fr
[CERGY-VIS]
ET SI ON PARLAIT SERVICE

REV.	Quant.	Indice / revision description	Date	Name
Af	-	AJOUT VARIANTE 06 / ADD VARIANT 06	25.06.13	GPA

Une consultation préalable de A.Raymond SARL est nécessaire pour toute mise en place de la pièce en automatique.
Automatic processing of the part requires prior consultation with A.Raymond SARL.

Exemple d'utilisation / *Use condition*

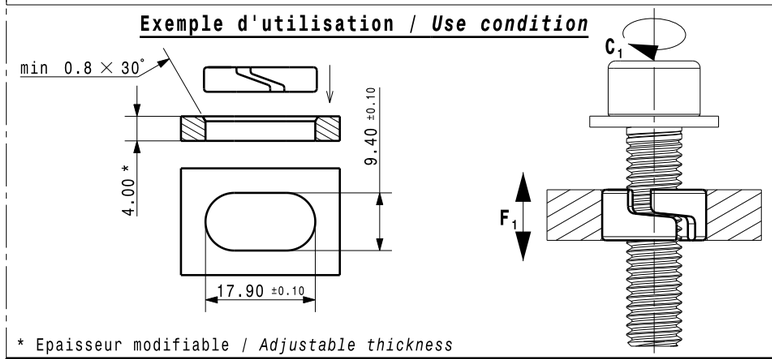

* Epaisseur modifiable / *Adjustable thickness*

ARaymond
113 cours Berriat BP 157
France - 38019 Grenoble cedex 1
Tel +33 (0) 4 76 33 49 49
Fax +33 (0) 4 76 78 20 50

Si probleme de comprehension, merci de demander la version francaise a ARaymond avant toute utilisation.
"CONDITIONS OF USE"
This drawing and all information (the "Drawing") disclosed are the exclusive property of A.Raymond.
By using this Drawing the Addressee acknowledge and accept that this Drawing
(1) is covered by A.Raymond intellectual property rights or know-how and
(2) is provided under the following conditions who represent a Deposit Agreement.
This Drawing is for Addressee internal use only limited to its estimation.
Without prior written consent of A.Raymond, no permission or rights for any purpose, is hereby granted, such as, without any limitation,
(1) the copy, in part or entirely
(2) and/or the presentation, in part or entirely, to any other third party outside the Addressee company or in the company but with no interest
(3) and/or the distribution of the Drawing, in part or entirely, in any medium
(4) and/or the creation of any derivative work.
In case of breach of these conditions, Addressee shall indemnify A.Raymond from and against all damages (compensatory or consequential), costs, expenses and charges, caused or arising out of or attributable to its willful misconduct, fraud, negligence, infringement of A.Raymond Intellectual Property rights. If the Addressee does not accept these conditions, please notify A.Raymond sender immediately.

Brevets / *Patent rights*			Classification code: AH-KA
N° Projet / *Project No.*	Origine / *Origin*	Chef de projet / *Project Manager*	PAULIN.G
Echelle / *scale*: 6:1	Format: A3	Tolerance / *General tolerance*: Dimension ± 0.50, Angle ± 5.00°	Date: 25.06.2013
			Realise / *Prepared by*: DELAHOUSSE.Q
	ALL DIMENSIONS ARE IN MILLIMETERS		Approuve / *Approved*: 20130625143450
	Epaisseur / *Mat. thickness*: -	Volume (mm³): 187,5	Poids / *Weight (g)*: 1,5

Finition / *finish*
See parts list
Voir tableau

Code finition / finish code: -

Traitement structural / *Material treatment*
C70D
>0,5 : TTH.HR 30 N : 61,3 a 64,7 (42 a 46 HRc)

Matiere / *Material*
C70D
-

Mat. code: -

Libelle / Title

Bague antifluage OBLONGUE
Anti-creep ring OBLONG

Reference / *Part no.*: **131459-0-00**

Drawing type: C-Customer

Ref. client / *Customer part no.*

Planche / *Sheet*: 1/1

CAD system & version: CATIA V5 R19 SP9

Nom fichier / *File name*: 131459-0C00