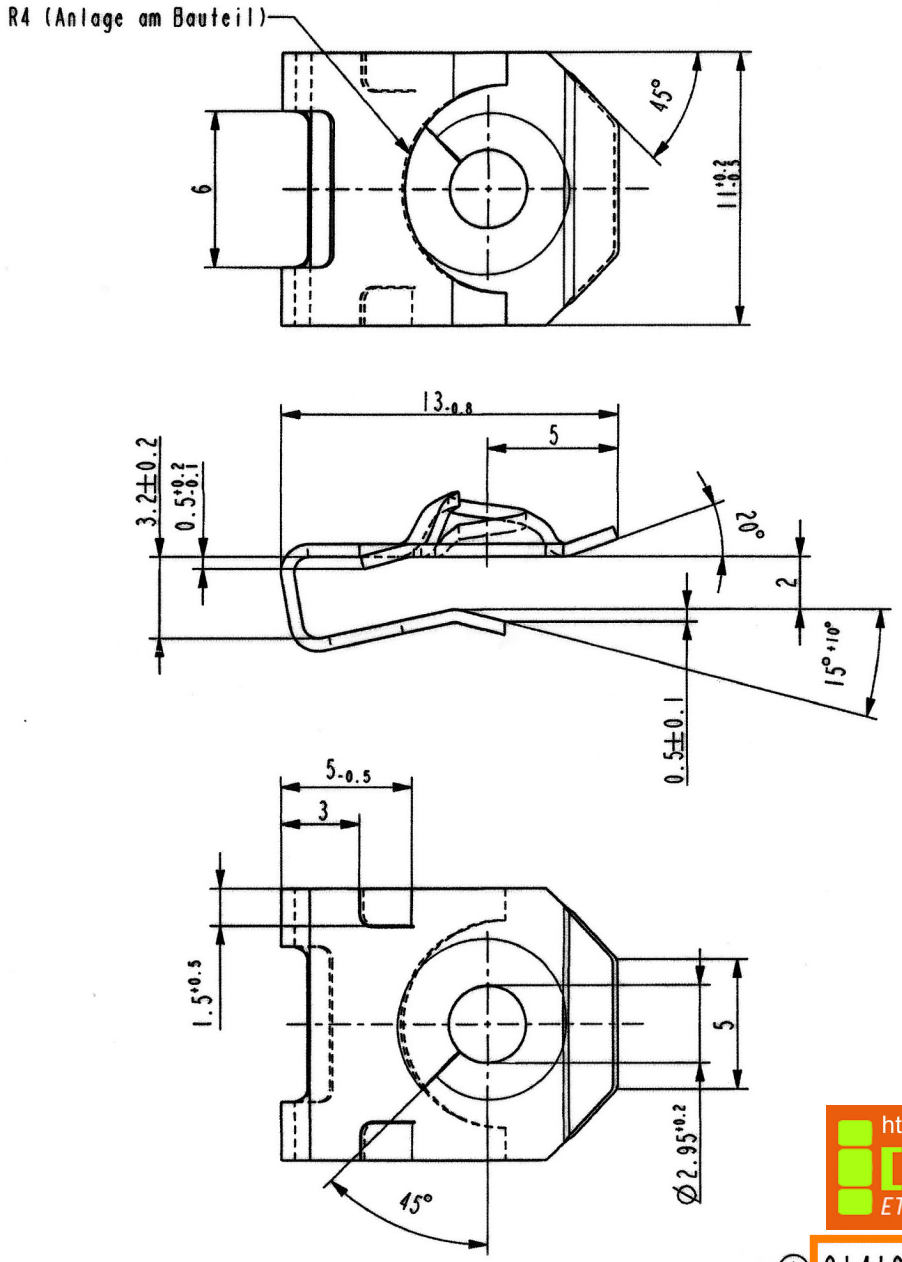

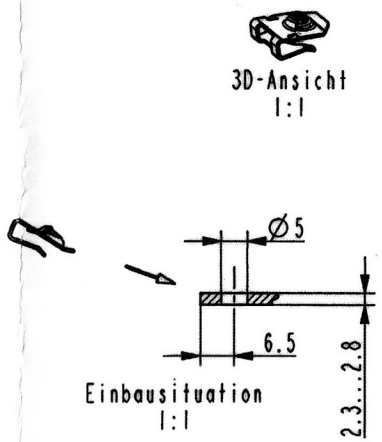

Vor Auslegung einer automatisierten Verarbeitung des Teils sollte Rueckspracche mit Fa. A.Raymond gehalten werden.
Fully automatic processing of the part requires prior consultation with A.Raymond GmbH.

Ind.	bisher vor/ how often	Beschreibung / Description	Datum/Date	Name
A	1x	Indexreform, Art.-Nr. gem. SAP geaendert	24.05.05	mj
-	-	Oberflaechenvariante hinzugefuegt	-	-

Aenderungen / Modifications

Format DIN A3

A.Raymond GmbH & Co. KG
SPEZIALBEFESTIGUNGSSYSTEME WELTWEIT / ENGINEERED FASTENERS WORLDWIDE

Bei Verstaendnisproblemen beantragen Sie bitte beim Absender die deutsche Fassung vor jeder Anwendung.
"CONDITIONS OF USE"
This drawing and all information (the "Drawing") disclosed are the exclusive property of A.Raymond. By using this Drawing the Addressee acknowledge and accept that this Drawing (1) is covered by A.Raymond' intellectual property rights or know-how and (2) is provided under the following conditions who represent a Deposit Agreement. This Drawing is for Adressee' internal use only limited to its estimation. Without prior written consent of A.Raymond, no permission or rights for any purpose, is hereby granted, such as, without any limitation, (1) the copy, in part or entirety (2) and/or the presentation, in part or entirety, to any other third party outside the Addressee' company or in the company but with no interest (3) and/or the distribution of the Drawing, in part or entirety, in any medium (4) and/or the creation of any derivative work. In case of breach of these conditions, Addressee shall indemnify A.Raymond from and against all damages (compensatory or consequential), costs, expenses and charges, caused or arising out of or attributable to its willful misconduct, fraud, negligence, infringement of A.Raymond' intellectual property rights. If the Addressee does not accept these conditions, please notify A.Raymond' sender immediately.

Dateiname/ Filename	CAD-PE: 014105_C_01		-
Ersatz fuer/ Substitute for	14105 Ind. 5 v. 11.04.1995	Proj.-Nr./ Proj.-No.	RASCH-Code AAAAC
		Vol.(mm³) -	Gewicht/ Weight (g) -
Schutzrechte/ Patent rights	vorbehalten / all rights reserved		
Gepr./ App.	F.-gepr./ Produktion	O.-gepr./ Quality	S.-gepr./ Patent app.
Massstab / Scale 5:1	Allgem.Tol. wenn nicht anders angegeben/ General tol. unless otherwise specified ±0.25 / ±3°	Datum/ Date 24.05.2005	Gez./ Drawn M. Junge
Oberflaechenbehandlg./ Finish	verzinkt / gelbchromatiert -		Kennzahl/ Code number 3000
Werkstoffbehandlg./ Material treatment	zwischenstufenverguetet 375 ... 475 HV 5		Blechdicke/ Mat.thickn. DIN EN 10 140 0.5
Werkstoff/ Material	C 67 S DIN EN 10 132-4 -		Mat.-Code 1000
Benennung/ Partname	Blechmutter fuer Gewinde EN ISO 1478 - ST3.9		
Teil-Nr./ Part-No.	014105 001		C

http://www.cergy-vis.fr
[CERGY-VIS]
ET SI ON PARLAIT SERVICE

Teil-Nr. / Part-No.	Oberflaeche / Farbe / Finish / colour	Kennzahl/ Code
(A) 014105 002	verzinkt/passiviert farblos	3250

Ausfuehrung / Execution

CAD-PE:12V-A3I.ZRL / 02.2005